VACUUBRAND®

Chemistry pumping unit PC 510 select



Link to the website

Product description

Our PC 500-series chemistry pumping units of this series are an excellent choice for supporting electronically controlled evaporation or drying processes. Our popular MZ 2C NT two stage chemistry diaphragm pump is the heart of these pumping units, frequently used for medium-sized vacuum applications involving common solvents. The integrated VACUU·SELECT controller provides an easy-to-use, application based interface that covers all common lab applications. The VACUU·SELECT controller has you covered. Use manual set-point-control for simple processes, run distillations, or create your own application with simple drag-and-drop editing. For solvent evaporation, it detects the boiling pressure and switches to two point control to hold pressure steady when a boiling point is detected. The inlet separator, made of glass with a robust protective coating, prevents particles and liquid droplets from entering the pump, preventing damage and extending pump life. And the exhaust vapor condenser allows for nearly complete recovery of solvents when used with a chilled water line or recirculating chiller for economical recycling and environmental protection.

Performance features

- VACUU·SELECT vacuum controller with graphical user interface simplifies work in the laboratory
- predefined applications save time and give reproducible results
- easy-to-use application editor allows own process sequences
- powerful vacuum pump with excellent chemical and condensate compatibility
- excellent environmental friendliness due to efficient solvent recovery

Technical data are subject to change without notice
© VACUUBRAND GMBH + CO KG | 2026

Link to the website:
https://shop.vacuubrand.com/20733157

Ordering data

Product name	Nominal mains voltage | mains frequency	Plug type	Articleno.
PC 510 select	230 V | 50-60 Hz	IN	20733157

Items supplied

Pumping unit completely mounted, ready for use, with manual.

Accessories

- Function extension for VACUU·SELECT controller VACUU·SELECT User Management (20700900)
- Silencer with hose 5cm DN 8-10mm (20636588)
- Adjustable elbow DN 10/8 mm (20637873)
- Vacuum tubing transparent DN 8 mm (20686061)
- Fluid level sensor for round bottom flask 500 ml 500 ml (20699908)
- Cooling water valve VKW-B (20674220)
- Set of diaphragms and valves MZ 2C NT / MZ 2C NT VARIO / PC 3002 (20696869)
- Set of diaphragms and valves MZ 2C NT / MZ 2C NT VARIO / PC 3002 (20696869)

Technical data are subject to change without notice
© VACUUBRAND GMBH + CO KG | 2026

Link to the website:
https://shop.vacuubrand.com/20733157

Technical data

Max. pumping speed 50 Hz (m^3/h)	2 m^3/h
Max. pumping speed 60 Hz (cfm)	1.4 cfm
Ultimate vacuum	7 mbar / 5 torr
Ultimate vacumm with gas ballast	12 mbar / 9 torr
Number of heads	2
Number of stages	2
Vacuum controller	VACUU·SELECT
Permissible ambient temperature range (operation)	10 - 40 °C
Permissible ambient temperature range (storage)	-10 - 60 °C
Max. outlet pressure (abs.)	1.1 bar
Inlet connection	Hose nozzle DN 8-10 mm
Outlet connection	Hose nozzle DN 8-10 mm
Coolant connection	2 x hose nozzle DN 6-8 mm
Rated motor power	0.18 kW
Rated speed 50/60 Hz	1500/1800 min^{-1}
Protection class IEC 60529	IP 20
Dimensions (L x W x H)	418 mm x 272 mm x 457 mm
Weight	17.6 kg
Noise (sound pressure level) in dBA at 50 Hz or 1500 rpm/62% (VARIO)/1500 rpm (VARIO-SP)/12500 Upm (VACUU·PURE®)	45 dBA
ATEX conformity	II 3/- G Ex h IIC T3 Gc X Internal Atm. only
NRTL certification	No
Interface	Ethernet (RJ45): Modbus TCP / USB (Type A): Data transfer, software update, RS-232 (additional adapter required)

Technical data are subject to change without notice
© VACUUBRAND GMBH + CO KG | 2026

Link to the website:
https://shop.vacuubrand.com/20733157

Pumping speed graph at 50 Hz

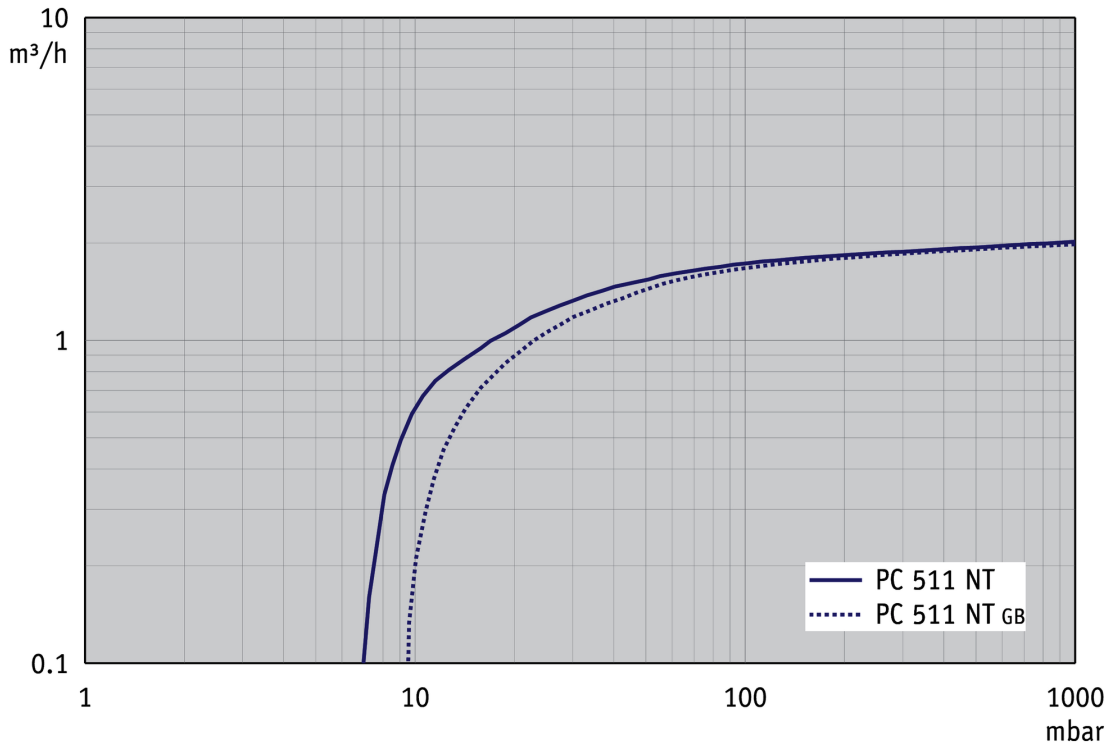

Pump down graph at 50 Hz (10 l volume)

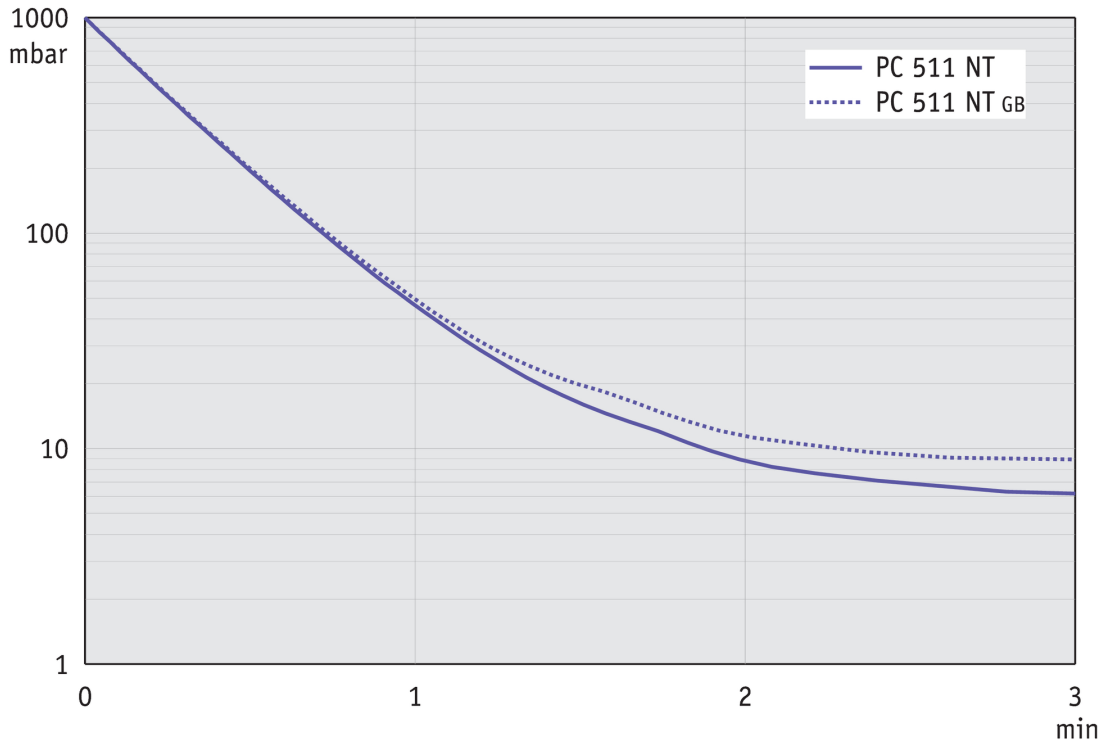

© VACUUBRAND GMBH + CO KG | 2026

Link to the website:
https://shop.vacuubrand.com/20733157

Pumping speed graph at 60 Hz

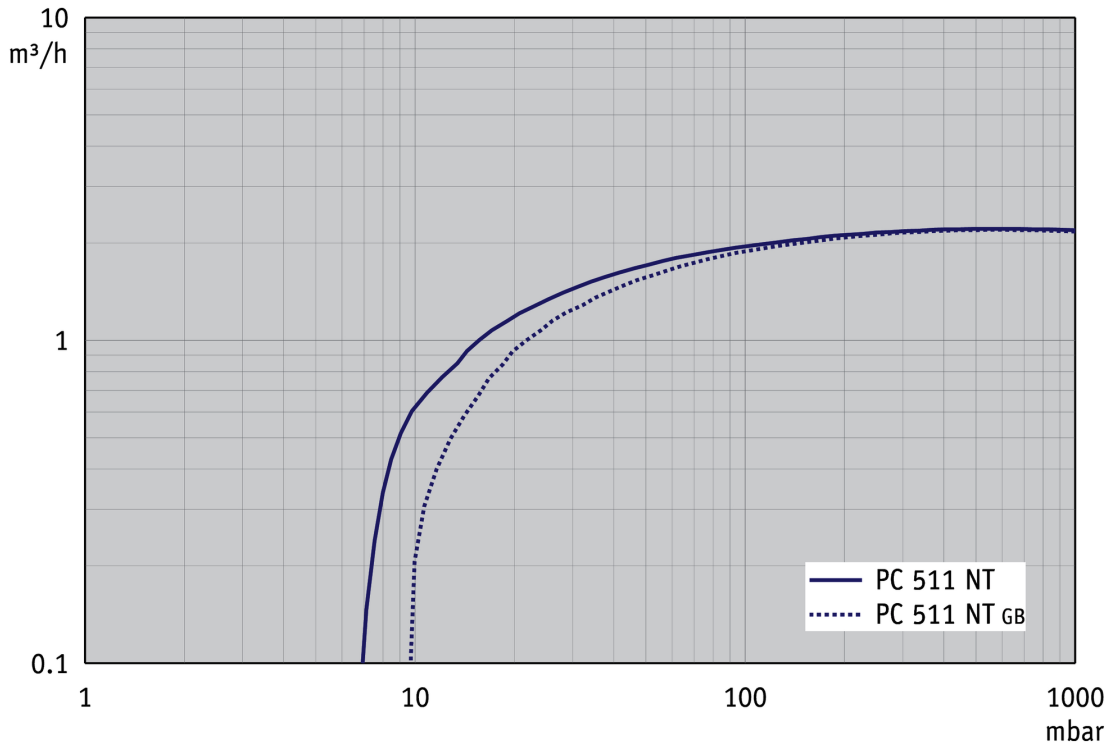

Pump down graph at 60 Hz (10 l volume)

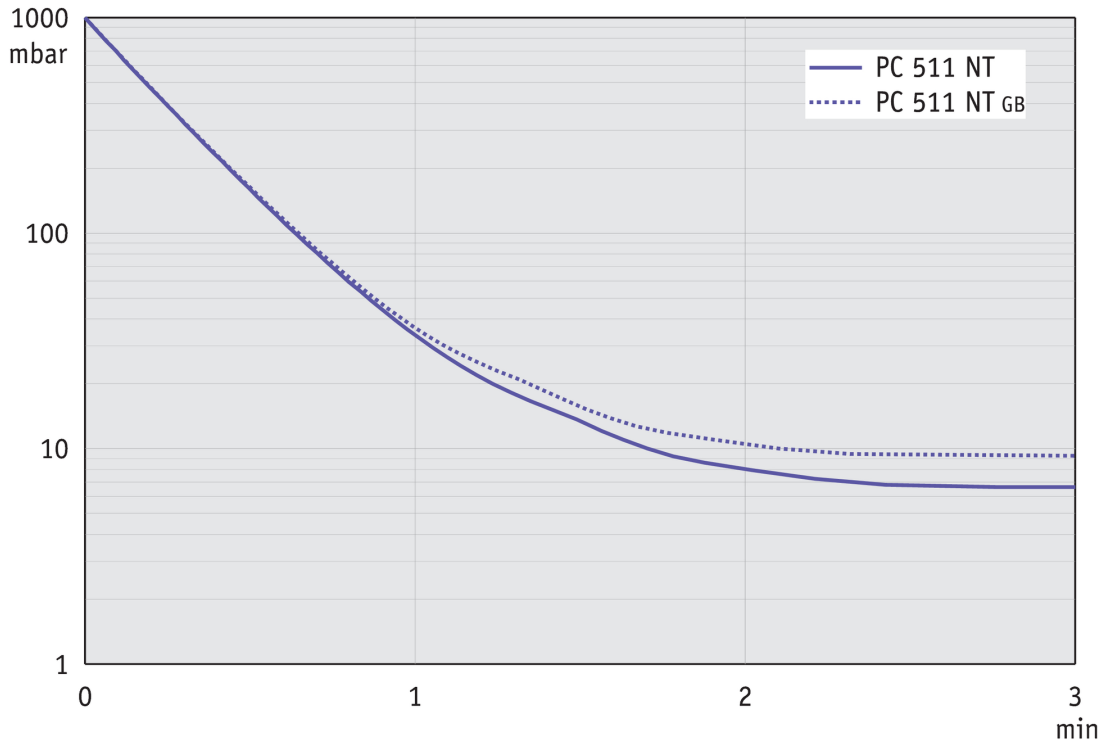

© VACUUBRAND GMBH + CO KG | 2026

Link to the website:
https://shop.vacuubrand.com/20733157

Dimension sheet



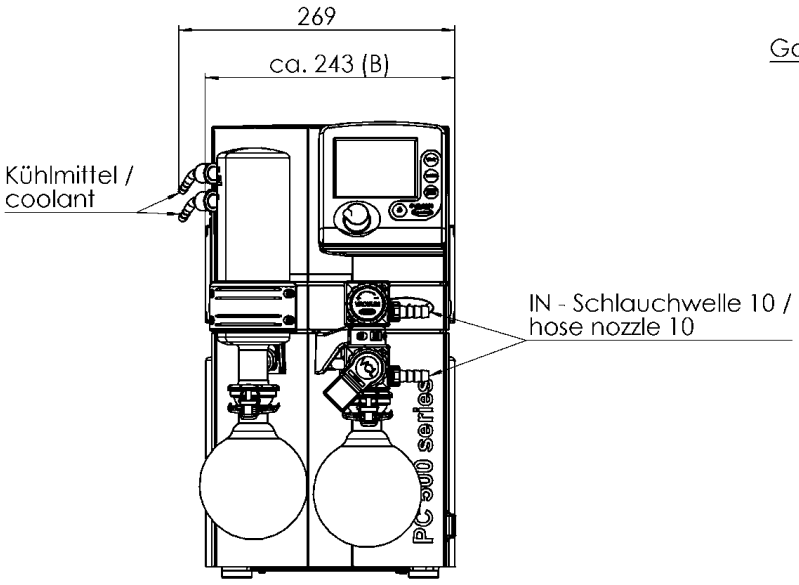

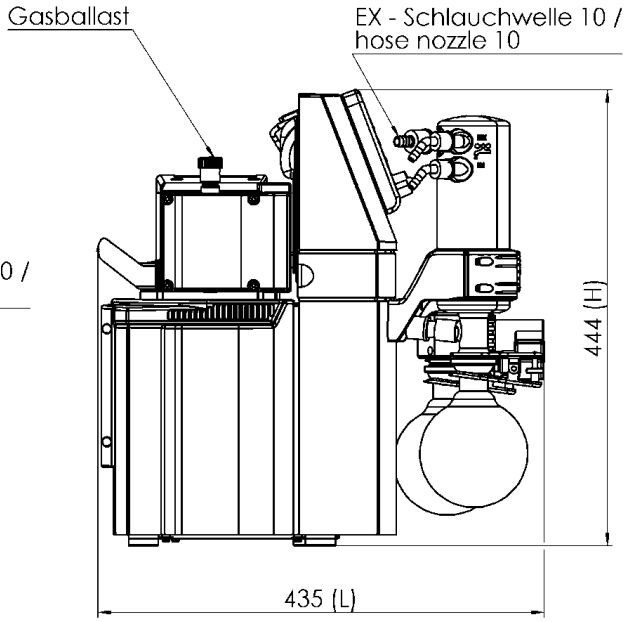

Alle Maße / all dimensions (mm)

VACUUBRAND PC 511 NT KSG
Version 2016/05/11

Technical data are subject to change without notice
© VACUUBRAND GMBH + CO KG | 2026

Link to the website:
https://shop.vacuubrand.com/20733157

VACUUBRAND GMBH + CO KG
P.O. Box 1664
97877 Wertheim
T +49 9342 808 5550
F +49 9342 808 5555

info@vacuubrand.com
www.vacuubrand.com

VACUUBRAND

VACUUBRAND is part of the Brand group, a manufacturer of high-quality and innovative laboratory equipment and vacuum technology with a global team of approx. 1,000 employees.

With highly motivated and qualified employees, we manufacture the world's most comprehensive product family for vacuum generation, measurement and control for the rough and fine vacuum range in the laboratory.

All with one goal:
Enabling our customers to run reliable, safe and efficient processes. This is why we commit ourselves to continuous innovation, first-class performance, and outstanding quality.

Engineering excellence is central to our ability to deliver products and solutions renowned for their quality, durability, and reliability. Innovative technology, high quality materials and extensive testing deliver unmatched performance - engineered and manufactured in Germany.

Together with you, our experts will find the best solution for your application and provide you with first-class service along the way.

© VACUUBRAND GMBH + CO KG

BRAND (Shanghai) Trading Co., Ltd.
Shanghai, China

T +86 21 6422 2318
info@brand.com.cn
china.brand.com.cn

BRAND Scientific Equipment Pvt. Ltd.
Mumbai, India

T +91 22 42957790
customersupport@brand.co.in
www.brand.co.in

BRANDTECH® Scientific, Inc.
Essex, CT. United States of America

T +1 860 767 2562
info@brandtech.com
www.brandtech.com

BRANDGROUP®