VACUUBRAND®

Chemistry diaphragm pump MD 12C NT



Link to the website

Product description

Three-stage chemistry diaphragm pumps are an excellent solution for continuous, oil-free pumping of corrosive gases and vapors and meet the highest requirements. The three-stage design of the eight-cylinder MD 12C NT pump provides the advantageous combination of high pumping speed and very low ultimate vacuum. All internal parts in contact with pumped media are made of chemically resistant fluoroplastics. Well-proven PTFE sandwich diaphragms provide increased reliability and extended operating life. With its gas ballast valve the MD 12C NT is optimally prepared for pumping easily condensable vapors, thanks to the very good ultimate vacuum even with open gas ballast valve also for high boiling solvents. Upgrade kits such as inlet separator (AK) and exhaust vapor condenser (EK) enable a later adaptation to changed process requirements. Eight-cylinder NT pumps features quiet operation with smooth, easy-to-clean surfaces.

Performance features

- outstanding chemical resistance and superior vapor tolerance
- reduced process time due to particularly high pumping speed even near ultimate vacuum
- whisper quiet and very low vibration
- very good ultimate vacuum even with open gas ballast valve for condensate purge
- long diaphragm lifetime, maintenance-free drive system

Technical data are subject to change without notice
© VACUUBRAND GMBH + CO KG | 2026

Link to the website:
https://shop.vacuubrand.com/20743302

Ordering data

Product name	Nominal mains voltage | mains frequency	Plug type	Articleno.
MD 12C NT	200-230 V | 50-60 Hz	UK, IN	20743302

Items supplied

Pump completely mounted, ready for use, with manual.

Accessories

- Inlet separator AK with round bottom flask 500 ml, with connections KF DN 25 and hose nozzle DN 15 mm AK 500 / KF DN 25 (20699979)
- Silencer with hose 5cm DN 8-10mm (20636588)
- Clamping ring for small flange KF DN 20/25 (20660001)
- External centring ring for small flange KF DN 20/25 (20660196)
- Vacuum tubing PVC with internal stainless steel spiral, with small flanges KF DN 25 (20686021)
- Small flange with hose nozzle KF DN 25 / DN 10 mm (20662807)
- Rubber vacuum tubing DN 10 mm (20686002)
- Set of diaphragms and valves MD 12C NT / MV 10C NT (20696839)
- Set of diaphragms and valves MD 12C NT / MV 10C NT (20696839)

© VACUUBRAND GMBH + CO KG | 2026

Technical data

Max. pumping speed 50 Hz (m^3/h)	12 m^3/h
Max. pumping speed 60 Hz (cfm)	7.0 cfm
Ultimate vacuum	2 mbar / 1.5 torr
Ultimate vacumm with gas ballast	4 mbar / 3 torr
Number of heads	8
Number of stages	3
Permissible ambient temperature range (operation)	10 - 40 °C
Permissible ambient temperature range (storage)	-10 - 60 °C
Max. outlet pressure (abs.)	1.1 bar
Inlet connection	small flange KF DN 25
Outlet connection	Hose nozzle DN 15 mm
Rated motor power	0.53 kW
Rated speed 50/60 Hz	1650 min^{-1}
Protection class IEC 60529	IP 40
Dimensions (L x W x H)	533 mm x 260 mm x 359 mm
Weight	28.1 kg
Noise (sound pressure level) in dBA at 50 Hz or 1500 rpm/62% (VARIO)/1500 rpm (VARIO-SP)/12500 Upm (VACUU·PURE®)	50 dBA
ATEX conformity	II 3/- G Ex h IIC T3 Gc X Internal Atm. only
NRTL certification	No

Technical data are subject to change without notice
© VACUUBRAND GMBH + CO KG | 2026

Link to the website:
https://shop.vacuubrand.com/20743302

Pumping speed graph at 50 Hz

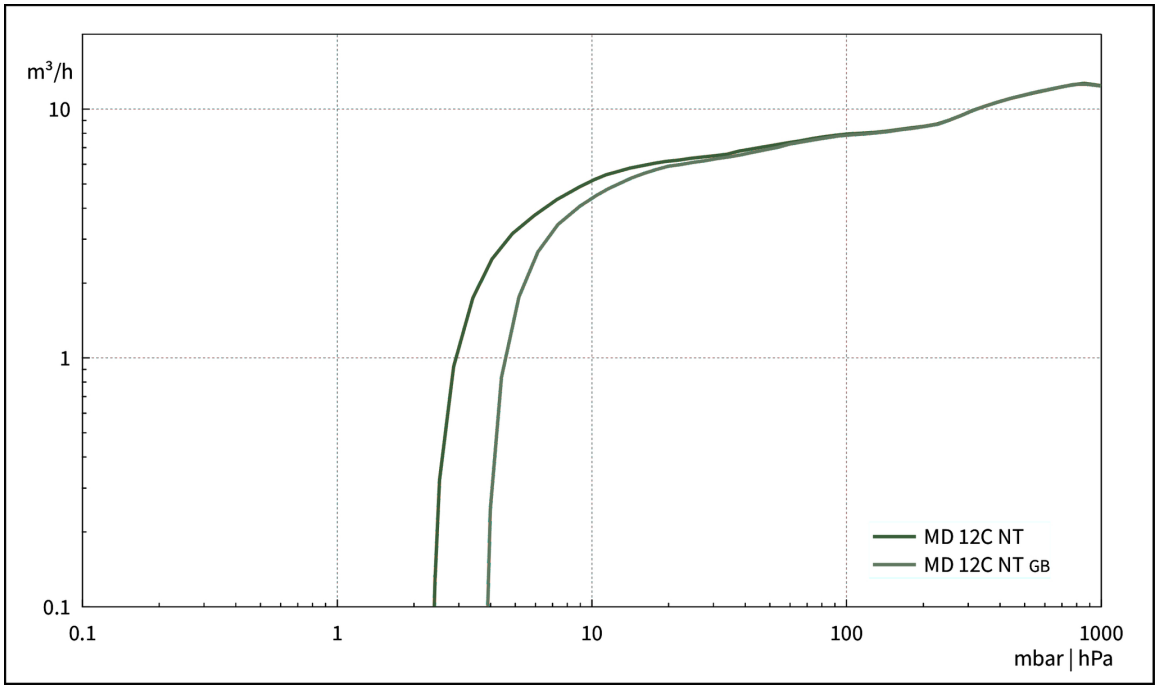

Pump down graph at 50 Hz (100 l volume)

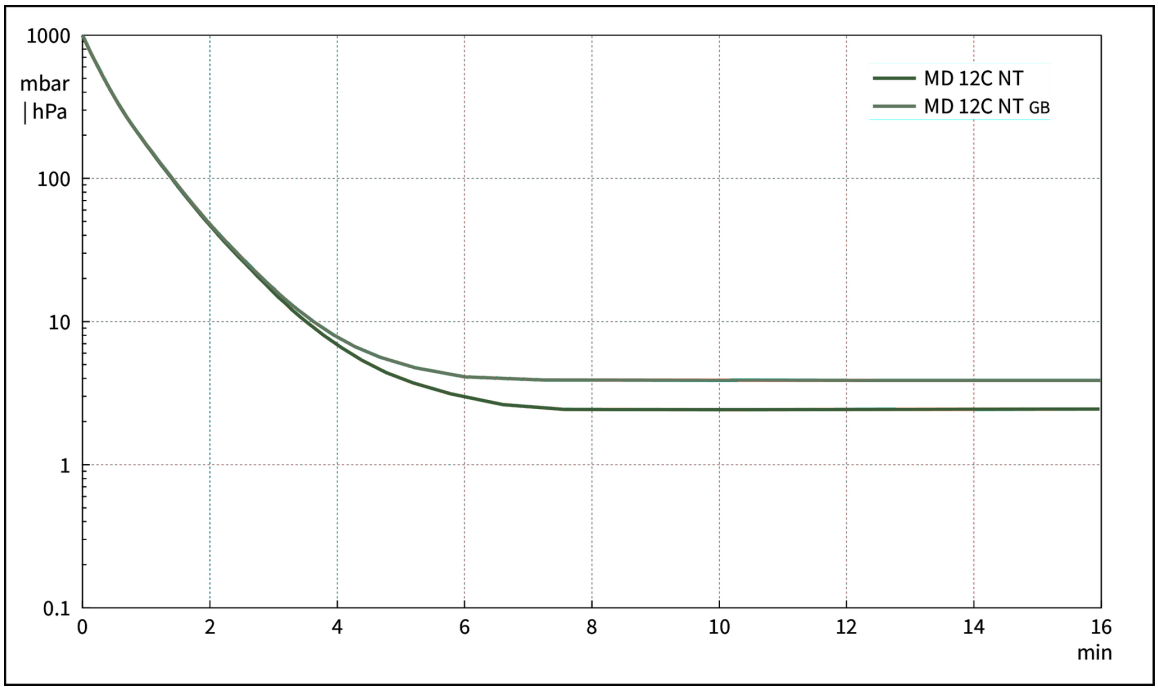

Technical data are subject to change without notice
© VACUUBRAND GMBH + CO KG | 2026

Link to the website:
https://shop.vacuubrand.com/20743302

Dimension sheet



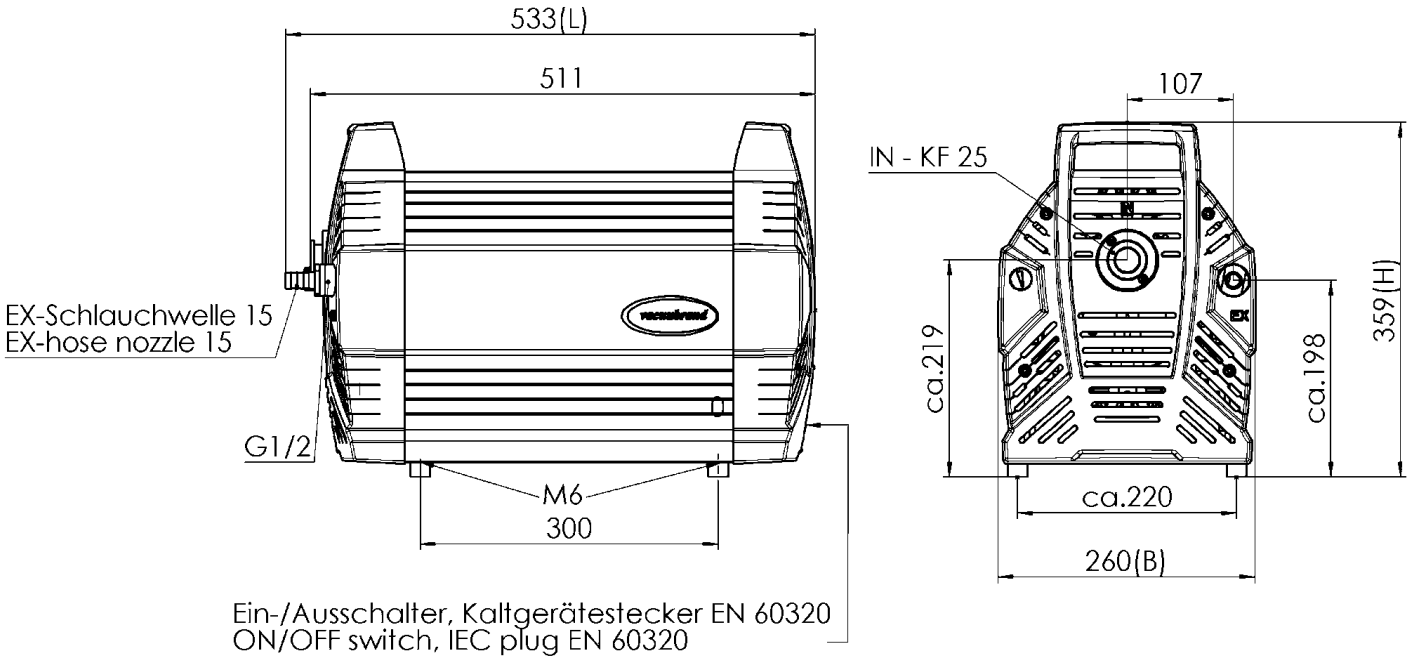

Alle Maße / all dimensions (mm)

VACUUBRAND ME 16C NT, MD 12C NT, MV 10C NT
Version 2012/04/20

Technical data are subject to change without notice
© VACUUBRAND GMBH + CO KG | 2026

Link to the website:
https://shop.vacuubrand.com/20743302

VACUUBRAND GMBH + CO KG
P.O. Box 1664
97877 Wertheim
T +49 9342 808 5550
F +49 9342 808 5555

info@vacuubrand.com
www.vacuubrand.com

VACUUBRAND

VACUUBRAND is part of the Brand group, a manufacturer of high-quality and innovative laboratory equipment and vacuum technology with a global team of approx. 1,000 employees.

With highly motivated and qualified employees, we manufacture the world's most comprehensive product family for vacuum generation, measurement and control for the rough and fine vacuum range in the laboratory.

All with one goal:
Enabling our customers to run reliable, safe and efficient processes. This is why we commit ourselves to continuous innovation, first-class performance, and outstanding quality.

Engineering excellence is central to our ability to deliver products and solutions renowned for their quality, durability, and reliability. Innovative technology, high quality materials and extensive testing deliver unmatched performance - engineered and manufactured in Germany.

Together with you, our experts will find the best solution for your application and provide you with first-class service along the way.

© VACUUBRAND GMBH + CO KG

BRAND (Shanghai) Trading Co., Ltd.
Shanghai, China

T +86 21 6422 2318
info@brand.com.cn
china.brand.com.cn

BRAND Scientific Equipment Pvt. Ltd.
Mumbai, India

T +91 22 42957790
customersupport@brand.co.in
www.brand.co.in

BRANDTECH® Scientific, Inc.
Essex, CT. United States of America

T +1 860 767 2562
info@brandtech.com
www.brandtech.com

BRANDGROUP®