VACUUBRAND®

Chemistry-HYBRID pump RC 6



Link to the website

Product description

The RC 6 chemistry-HYBRID pump is a combination of a two-stage rotary vane pump and a two-stage chemistry diaphragm pump for optimized corrosion resistance. The diaphragm pump maintains the oil reservoir under vacuum in order to keep the partial pressures of solvent vapors at levels below their condensation points and to reduce largely the concentration of oxygen and corrosive gases. Therefore the RC 6 chemistry-HYBRID pump has a much higher solvent vapor pumping capability and resistance to aggressive gases than conventional rotary vane pumps.

Performance features

- reduced internal corrosion, even when working with corrosive vapors
- oil changes typically reduced 90% or more compared with rotary vane pumps alone
- most economical solution: In practical operation a cold trap is often no longer necessary
- ease of maintenance due to telescopic design

Technical data are subject to change without notice
© VACUUBRAND GMBH + CO KG | 2026

Link to the website:
https://shop.vacuubrand.com/20798562

Ordering data

Product name	Nominal mains voltage | mains frequency	Plug type	Articleno.
RC 6	230 V | 50-60 Hz	UK, IN	20798562

Items supplied

Pump completely mounted, ready for use after oil filling (bottle 0.5 l enclosed), with manual.

Accessories

- PTFE-tubing (antistatic) with small flanges KF DN 16 (20686031)
- Metal vacuum tubing with small flanges KF DN 16 (20673336)
- Base module for chemistry pumping unit (without pump) PC 8 (20699949)
- Filter for oil mist separator, ceramic RC (20640187)
- Package fine vacuum control VACUU·SELECT + VACUU·VIEW extended, KF DN 16 (20700100)
- Package fine vacuum control VACUU·SELECT + VSP 3000, KF DN 16 (20700101)
- Vacuum tubing transparent DN 8 mm (20686061)
- Small flange with hose nozzle KF DN 16 / DN 10 mm (20662806)
- Maintenance kit RC 6 (20649990)
- Maintenance kit RC 6 (20649990)

© VACUUBRAND GMBH + CO KG | 2026

Technical data

Max. pumping speed 50 Hz (m^3/h)	5.9 m^3/h
Max. pumping speed 60 Hz (cfm)	4.1 cfm
Ultimate vacuum	2 x 10^{-3} mbar / 1.5 x 10^{-3} torr
Ultimate vacumm with gas ballast	1 x 10^{-2} mbar / 0.75 x 10^{-2} torr
Ultimate partial vacuum without gas ballast	4 x 10^{-4} mbar / 3 x 10^{-4} torr
Water vapor tolerance	>> 40 mbar / >> 30 torr
Number of heads	2
Number of stages	2 + 2
Permissible ambient temperature range (operation)	12 - 40 °C
Permissible ambient temperature range (storage)	-10 - 60 °C
Max. outlet pressure (abs.)	1.1 bar
Oil capacity min./max.	0.34 / 0.50 l
Inlet connection	small flange KF DN 16
Outlet connection	Hose nozzle DN 8-10 mm
Rated motor power	0.3 kW
Rated speed 50/60 Hz	1500/1800 min^{-1}
Protection class IEC 60529	IP 40
Dimensions (L x W x H)	526 mm x 302 mm x 226 mm
Weight	25 kg
Noise (sound pressure level) in dBA at 50 Hz or 1500 rpm/62% (VARIO)/1500 rpm (VARIO-SP)/12500 Upm (VACUU·PURE®)	50 dBA
NRTL certification	No

Technical data are subject to change without notice
© VACUUBRAND GMBH + CO KG | 2026

Link to the website:
https://shop.vacuubrand.com/20798562

Pumping speed graph at 50 Hz

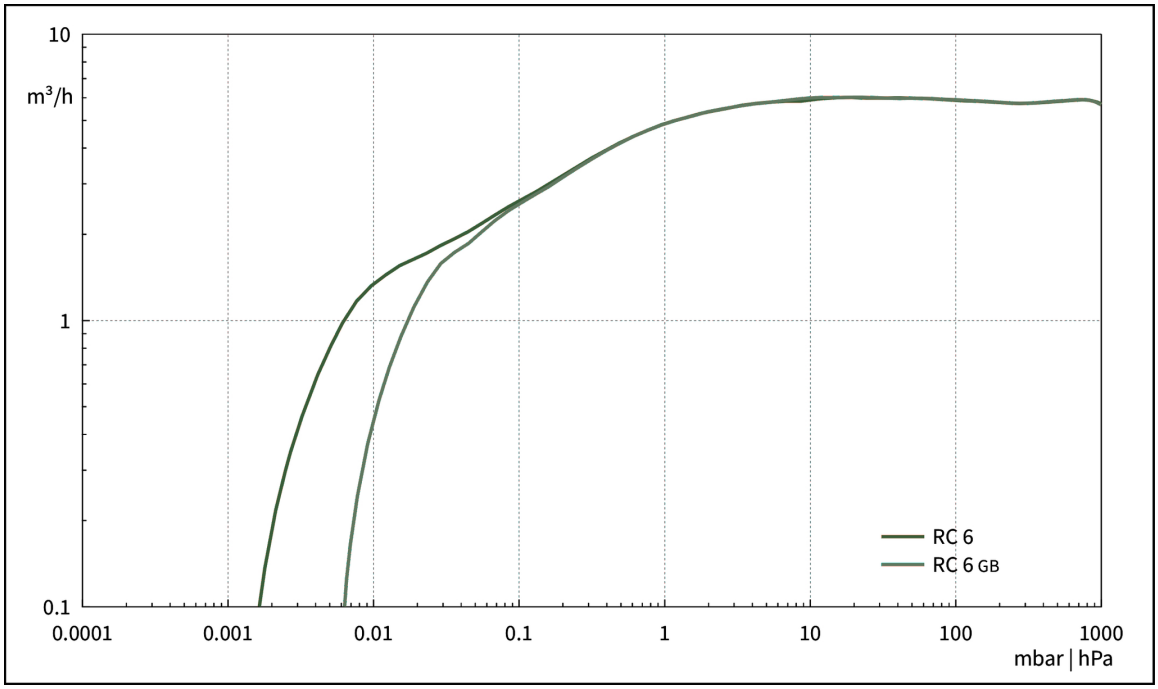

Pump down graph at 50 Hz (10 l volume)

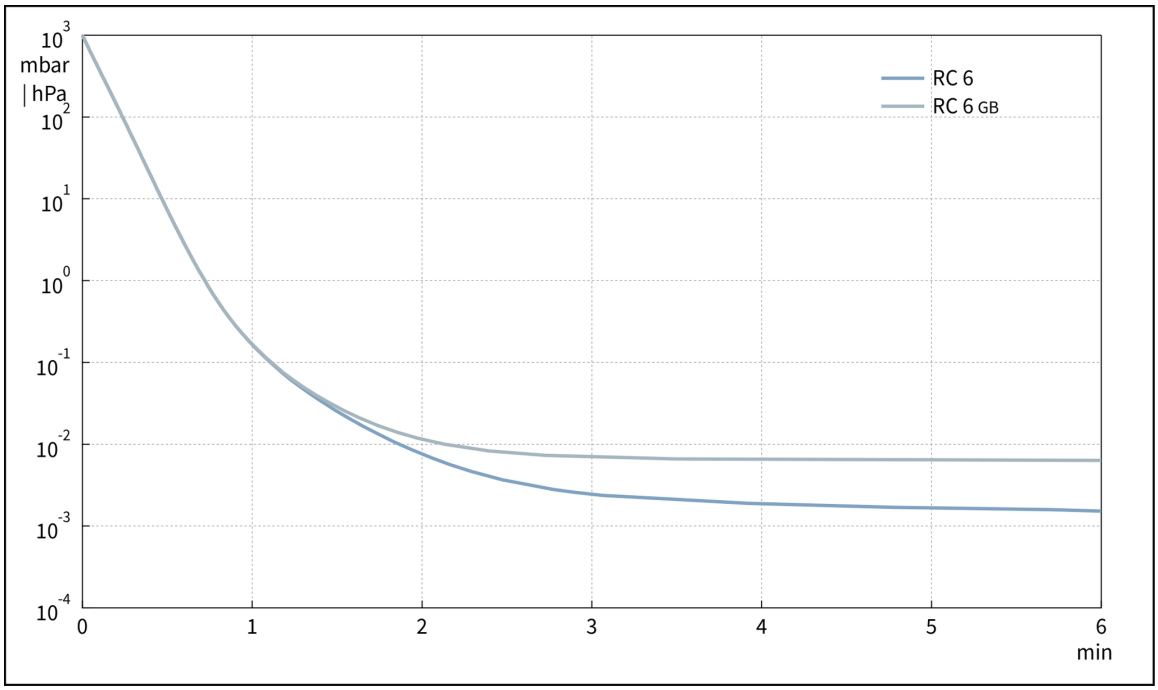

© VACUUBRAND GMBH + CO KG | 2026

Link to the website:
https://shop.vacuubrand.com/20798562

Pumping speed graph at 60 Hz

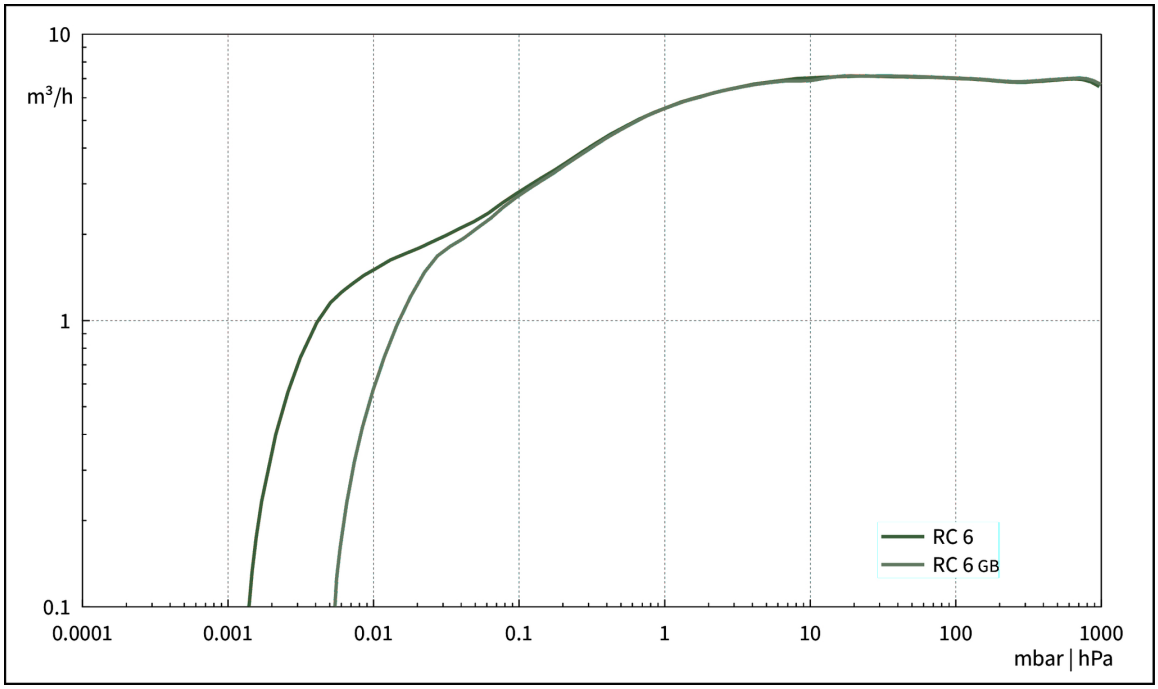

Pump down graph at 60 Hz (10 l volume)

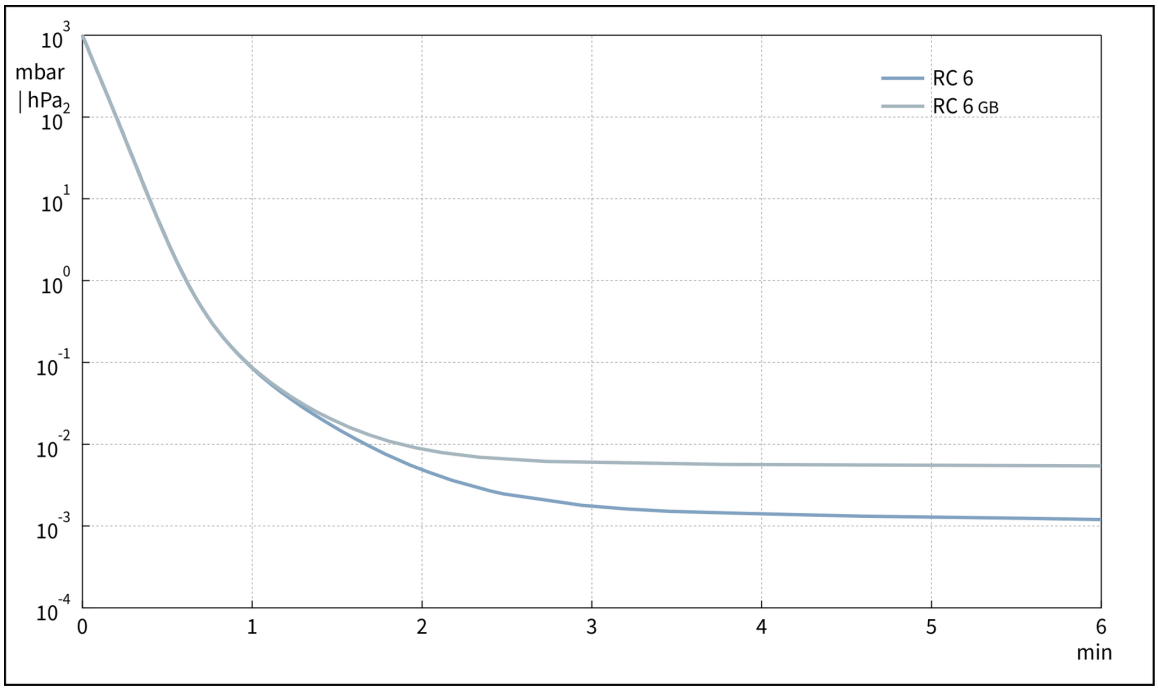

© VACUUBRAND GMBH + CO KG | 2026

Link to the website:
https://shop.vacuubrand.com/20798562

Dimension sheet

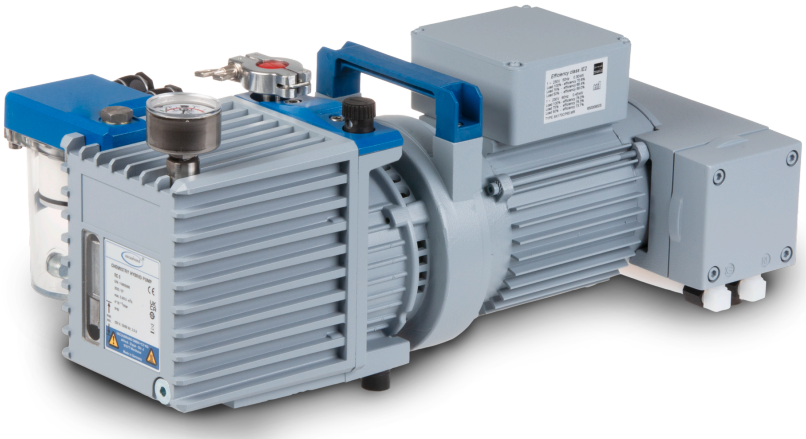

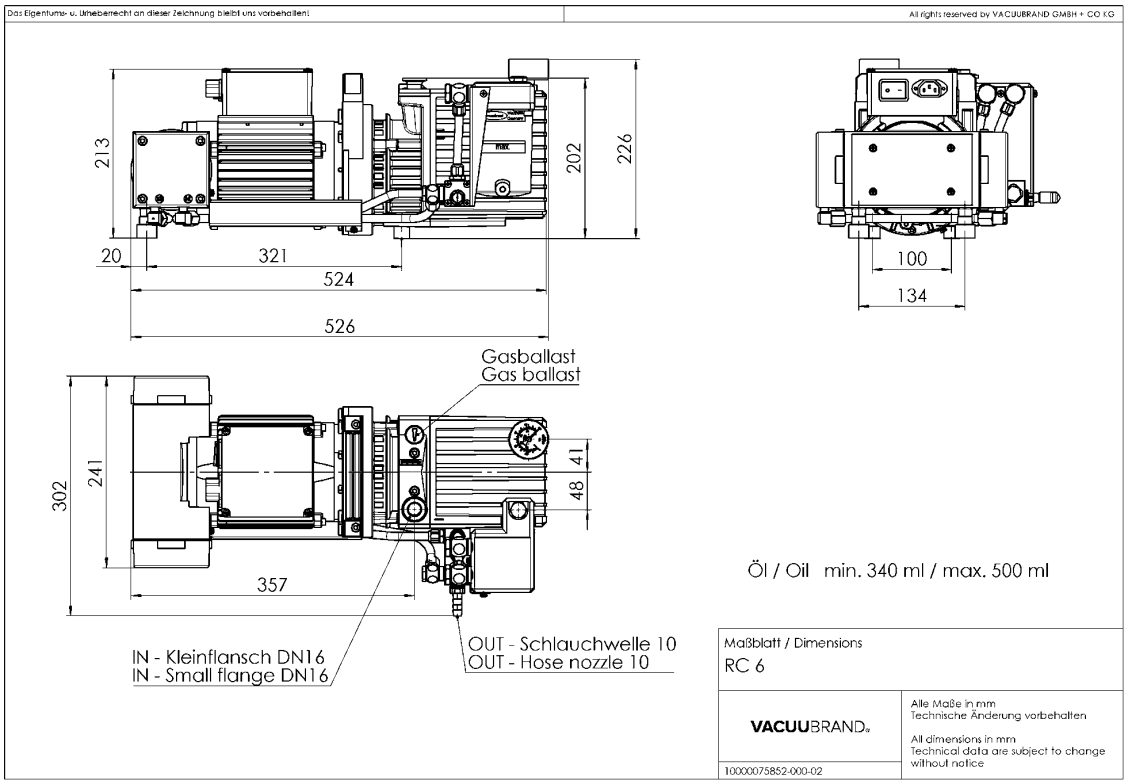

© VACUUBRAND GMBH + CO KG | 2026

Link to the website:
https://shop.vacuubrand.com/20798562

VACUUBRAND GMBH + CO KG
P.O. Box 1664
97877 Wertheim
T +49 9342 808 5550
F +49 9342 808 5555

info@vacuubrand.com
www.vacuubrand.com

VACUUBRAND

VACUUBRAND is part of the Brand group, a manufacturer of high-quality and innovative laboratory equipment and vacuum technology with a global team of approx. 1,000 employees.

With highly motivated and qualified employees, we manufacture the world's most comprehensive product family for vacuum generation, measurement and control for the rough and fine vacuum range in the laboratory.

All with one goal:
Enabling our customers to run reliable, safe and efficient processes. This is why we commit ourselves to continuous innovation, first-class performance, and outstanding quality.

Engineering excellence is central to our ability to deliver products and solutions renowned for their quality, durability, and reliability. Innovative technology, high quality materials and extensive testing deliver unmatched performance - engineered and manufactured in Germany.

Together with you, our experts will find the best solution for your application and provide you with first-class service along the way.

© VACUUBRAND GMBH + CO KG

BRAND (Shanghai) Trading Co., Ltd.
Shanghai, China

T +86 21 6422 2318
info@brand.com.cn
china.brand.com.cn

BRAND Scientific Equipment Pvt. Ltd.
Mumbai, India

T +91 22 42957790
customersupport@brand.co.in
www.brand.co.in

BRANDTECH® Scientific, Inc.
Essex, CT. United States of America

T +1 860 767 2562
info@brandtech.com
www.brandtech.com

BRANDGROUP®