VACUUBRAND®

化学真空系统
MD 12C NT +AK+EK



网站链接

产品说明

三级化学隔膜泵有非常广泛地用途，如排气、蒸发及气体或蒸汽的抽空。其既有非常大的抽速，又非常适应高真空需求，如用于高沸点溶剂。MD 12C NT 基础泵配有一个气镇阀，在开启时仍有很好的极限真空，紧凑的设计下仍有卓越的性能。一贯的极佳的耐化学腐蚀性，使其在化学及制药领域几乎通用。进气口可选缓冲瓶（AK），防止颗粒或液滴进入泵内。 出气口的废气冷凝器（EK）高效且结构紧凑。冷凝器可达到近100%的溶剂回收，有效地循环并主动保护环境。

性能特点

- 卓越的化学耐腐蚀性和蒸汽耐受性
- 接近极限真空时仍有很大的抽速，使得过程时间缩短
- 排气安静，振动极低
- 开启气镇吹扫冷凝液时仍有很好的极限真空
- MD 12C NT +AK+EK系统装配了高效的溶剂回收系统及进气口缓冲瓶，用于复杂的操作环境

技术参数如有变化,恕不另行通知
© VACUUBRAND GMBH + CO KG | 2026

网站链接:
https://shop.vacuubrand.com/20743602

订购信息

产品名称	额定电源电压|工作频率	电源插头类型	订货号
MD 12C NT +AK+EK	200-230 V | 50-60 Hz	UK, IN	20743602

货品配置

真空系统安装完毕，连接即可使用，附带说明书

配件

- DN 8-10mm (20636588)
- **小法兰的中心支架** KF DN 20/25 (20660001)
- **小法兰外齐式环形中心支架** KF DN 20/25 (20660196)
- PVC**真空管，内置不锈钢螺线，带小法兰** KF DN 25 (20686021)
- **带软管喷嘴接头的小法兰** KF DN 25 / DN 10 mm (20662807)
- **橡胶真空管** DN 10 mm (20686002)
- **密封圈套装** MD 12C NT / MV 10C NT (20696839)
- **密封圈套装** MD 12C NT / MV 10C NT (20696839)

© VACUUBRAND GMBH + CO KG | 2026

技术指标

50 Hz **最大抽速** (m^3/h)	12 m^3/h
60 Hz **最大抽速** (cfm)	7.0 cfm
极限真空	2 mbar / 1.5 torr
极限真空，使用气镇	4 mbar / 3 torr
泵头数	8
泵级数	3
的允许环境温度范围（运行）	10 - 40 °C
的允许环境温度范围（存放）	-10 - 60 °C
最大出气口压力 (绝对压力)	1.1 bar
进气口连接	KF DN 25 **小法兰** / DN 15 mm **软管喷嘴接头**
出气口连接	**软管喷嘴接头** DN 8-10 mm
冷却液接口	2**个** DN 6-8 mm **软管喷嘴接头**
额定电机功率	0.53 kW
额定转速 50/60 Hz	1650 min^{-1}
防护等级	IP 40
尺寸（长x宽x高）	616 mm x 387 mm x 395 mm
重量	28.9 kg
噪音水平 50 Hz/1500 Upm/62% (VARIO)/1500 Upm (VARIO-SP)/12500 Upm (VACUU·PURE®)	50 dBA
ATEX**规格**	II 3/- G Ex h IIC T3 Gc X Internal Atm. only
NRTL **标准**	**否**

© VACUUBRAND GMBH + CO KG | 2026

50 Hz下的抽速曲线

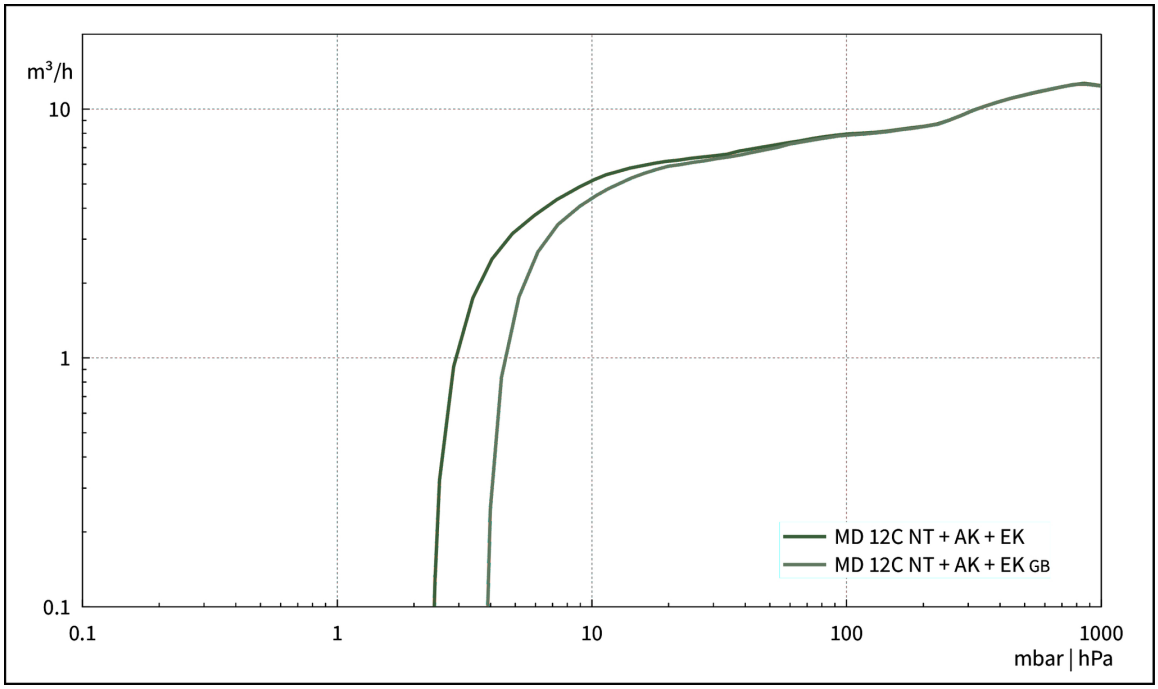

50 Hz下的抽气曲线 （100升容积）

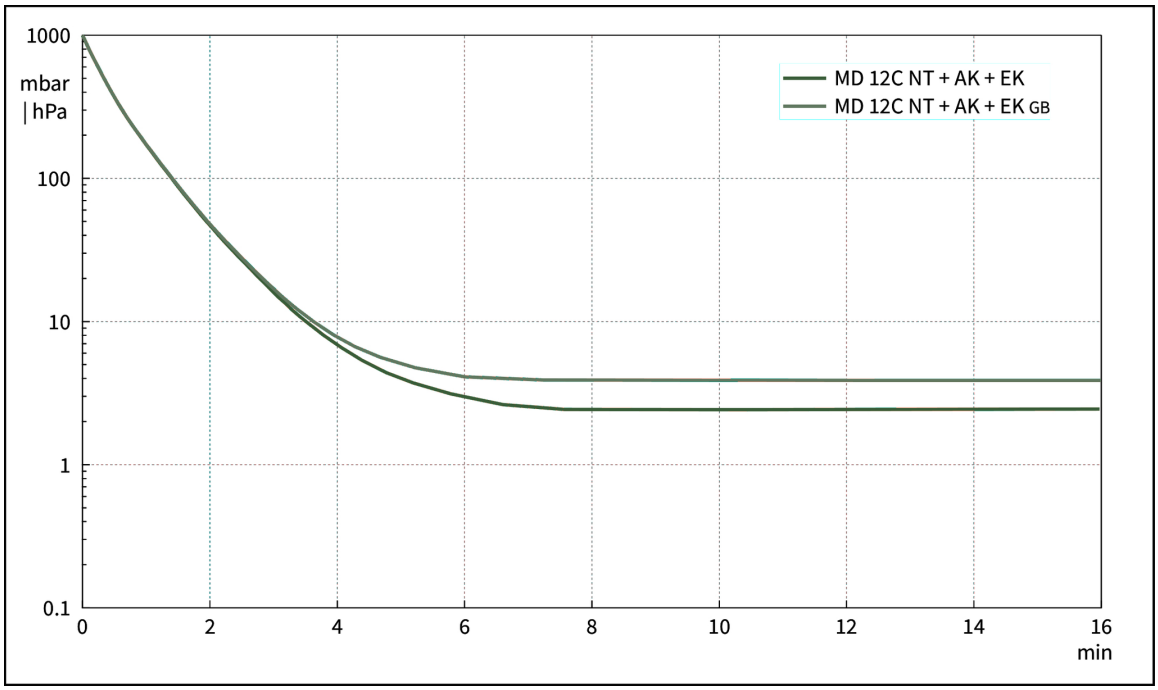

© VACUUBRAND GMBH + CO KG | 2026

尺寸规格表



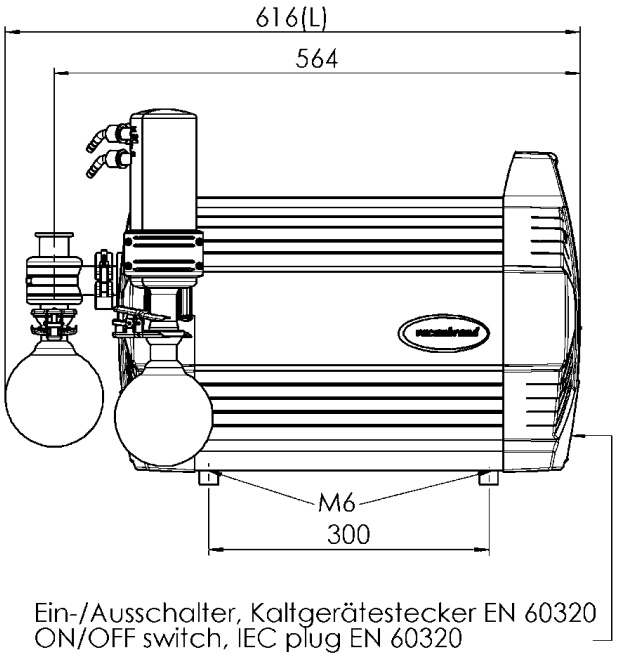

Ein-/Ausschalter, Kaltgerätestecker EN 60320
ON/OFF switch, IEC plug EN 60320

Alle Maße / all dimensions (mm)

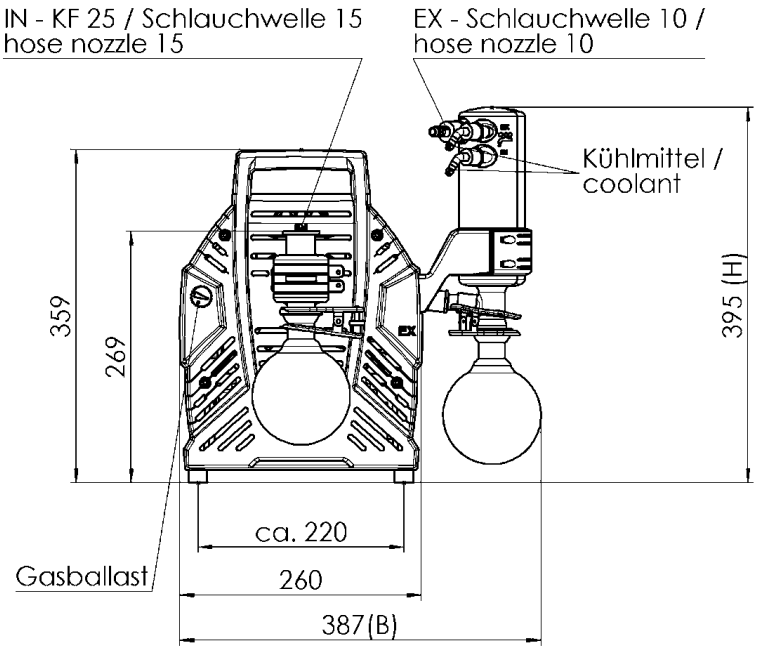

VACUUBRAND MD 12C NT AK+EK
Version 2012/07/30

© VACUUBRAND GMBH + CO KG | 2026

网站链接:
https://shop.vacuubrand.com/20743602

VACUUBRAND GMBH + CO KG
P.O. Box 1664
97877 Wertheim
T +49 9342 808 5550
F +49 9342 808 5555

info@vacuubrand.com
www.vacuubrand.com

VACUUBRAND

VACUUBRAND is part of the Brand group, a manufacturer of high-quality and innovative laboratory equipment and vacuum technology with a global team of approx. 1,000 employees.

With highly motivated and qualified employees, we manufacture the world's most comprehensive product family for vacuum generation, measurement and control for the rough and fine vacuum range in the laboratory.

All with one goal:
Enabling our customers to run reliable, safe and efficient processes. This is why we commit ourselves to continuous innovation, first-class performance, and outstanding quality.

Engineering excellence is central to our ability to deliver products and solutions renowned for their quality, durability, and reliability. Innovative technology, high quality materials and extensive testing deliver unmatched performance - engineered and manufactured in Germany.

Together with you, our experts will find the best solution for your application and provide you with first-class service along the way.

© VACUUBRAND GMBH + CO KG

BRAND (Shanghai) Trading Co., Ltd.
Shanghai, China

T +86 21 6422 2318
info@brand.com.cn
china.brand.com.cn

BRAND Scientific Equipment Pvt. Ltd.
Mumbai, India

T +91 22 42957790
customersupport@brand.co.in
www.brand.co.in

BRANDTECH® Scientific, Inc.
Essex, CT. United States of America

T +1 860 767 2562
info@brandtech.com
www.brandtech.com

BRANDGROUP®