VACUUBRAND®

# 化学隔膜泵
# MD 12C NT




网站链接

## 产品说明

三级化学隔膜泵是针对腐蚀性气体和蒸汽的一种持续的、无油抽气的优秀解决方案，可以满足非常高的要求。MD 12C NT 的八泵头三级结构，使其同时具有大抽气速度和超高极限真空的优点。所有与所抽介质接触的部件均采用耐化学腐蚀的氟塑料。经广泛验证的PTFE“三明治”夹层结构膜片增强了其稳定性，同时延长操作寿命。MD 12C NT 配有气镇阀，非常适合用于抽取易冷凝蒸汽。升级配件有进气口收集瓶（AK）和出气口蒸汽冷凝器（EK），可满足后期的工艺需求。八泵头的NT系列真空泵表面设计整洁，非常便于清理。

## 性能特点

- 卓越的化学耐腐蚀性和蒸汽耐受性
- 接近极限真空时仍有很大的抽速，使得过程时间缩短
- 排气安静，振动极低
- 开启气镇吹扫冷凝液时仍有很好的极限真空
- 膜片寿命长，驱动系统免维护

技术参数如有变化,恕不另行通知

© VACUUBRAND GMBH + CO KG | 2026

网站链接:
https://shop.vacuubrand.com/20743302

## 订购信息

| 产品名称 | 额定电源电压|工作频率 | 电源插头类型 | 订货号 |
|---|---|---|---|
| MD 12C NT | 200-230 V \| 50-60 Hz | UK, IN | 20743302 |

## 货品配置

泵体安装完毕，连接即可使用，附带说明书

## 配件

- **进气口收集瓶**AK，**配**500ml**圆底烧瓶**，KF DN 25 **法兰接口和**DN 15 mm**的喷嘴软管接口** AK 500 / KF DN 25 (20699979)
- DN 8-10mm (20636588)
- **小法兰的中心支架** KF DN 20/25 (20660001)
- **小法兰外齐式环形中心支架** KF DN 20/25 (20660196)
- PVC**真空管，内置不锈钢螺线，带小法兰** KF DN 25 (20686021)
- **带软管喷嘴接头的小法兰** KF DN 25 / DN 10 mm (20662807)
- **橡胶真空管** DN 10 mm (20686002)
- **密封圈套装** MD 12C NT / MV 10C NT (20696839)
- **密封圈套装** MD 12C NT / MV 10C NT (20696839)


© VACUUBRAND GMBH + CO KG | 2026

## 技术指标

| | |
|---|---|
| 50 Hz **最大抽速** ($m^3/h$) | 12 $m^3/h$ |
| 60 Hz **最大抽速** (cfm) | 7.0 cfm |
| **极限真空** | 2 mbar / 1.5 torr |
| **极限真空，使用气镇** | 4 mbar / 3 torr |
| **泵头数** | 8 |
| **泵级数** | 3 |
| **的允许环境温度范围（运行）** | 10 - 40 °C |
| **的允许环境温度范围（存放）** | -10 - 60 °C |
| **最大出气口压力** (绝对压力) | 1.1 bar |
| **进气口连接** | KF DN 25 **小法兰** |
| **出气口连接** | DN 15 mm **软管喷嘴接头** |
| **额定电机功率** | 0.53 kW |
| **额定转速** 50/60 Hz | 1650 $min^{-1}$ |
| **防护等级** | IP 40 |
| **尺寸（长x宽x高）** | 533 mm x 260 mm x 359 mm |
| **重量** | 28.1 kg |
| **噪音水平** 50 Hz/1500 Upm/62% (VARIO)/1500 Upm (VARIO-SP)/12500 Upm (VACUU·PURE®) | 50 dBA |
| ATEX**规格** | II 3/- G Ex h IIC T3 Gc X Internal Atm. only |
| NRTL **标准** | **否** |


© VACUUBRAND GMBH + CO KG | 2026

## 50 Hz下的抽速曲线

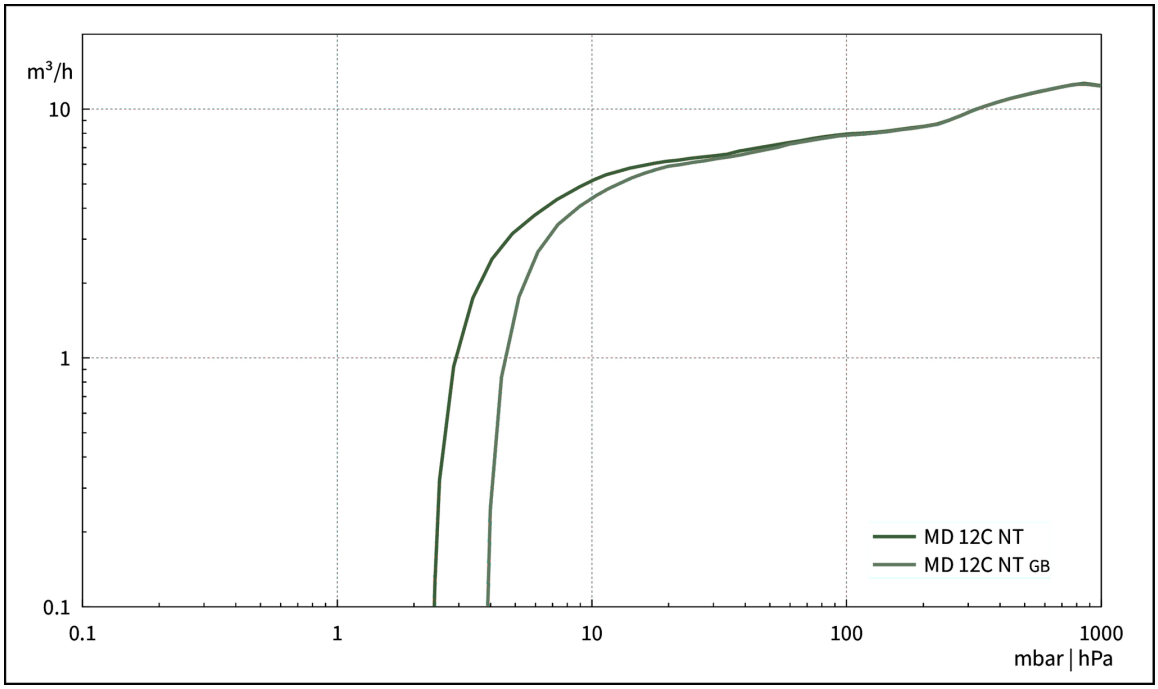


## 50 Hz下的抽气曲线 （100升容积）

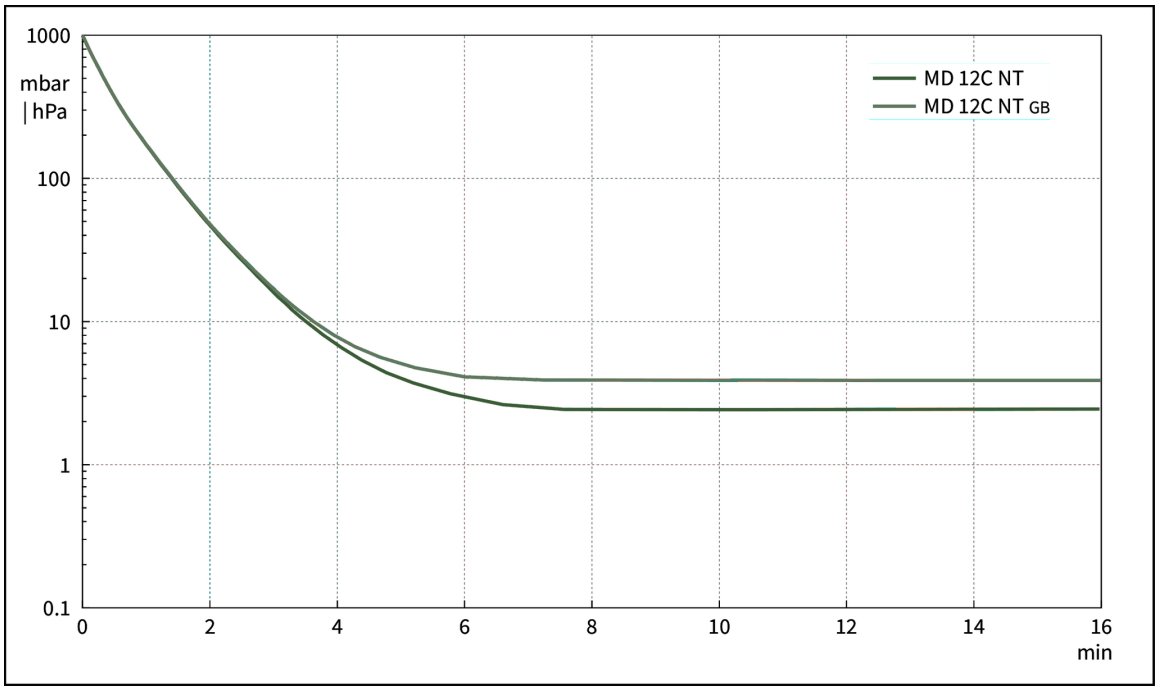



© VACUUBRAND GMBH + CO KG | 2026

# 尺寸规格表




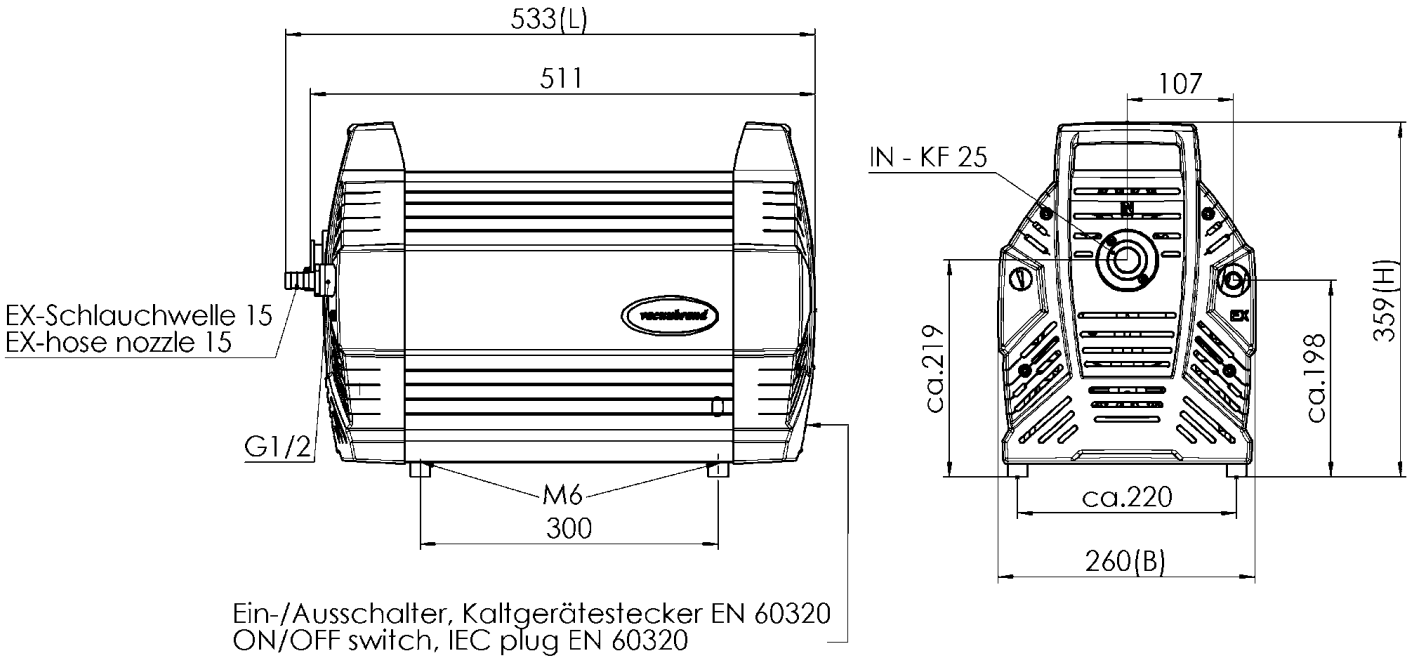


Alle Maße / all dimensions (mm)

VACUUBRAND ME 16C NT, MD 12C NT, MV 10C NT
Version 2012/04/20


© VACUUBRAND GMBH + CO KG | 2026

网站链接:
https://shop.vacuubrand.com/20743302

VACUUBRAND GMBH + CO KG
P.O. Box 1664
97877 Wertheim
T +49 9342 808 5550
F +49 9342 808 5555

info@vacuubrand.com
www.vacuubrand.com

VACUUBRAND

VACUUBRAND is part of the Brand group, a manufacturer of high-quality and innovative laboratory equipment and vacuum technology with a global team of approx. 1,000 employees.

With highly motivated and qualified employees, we manufacture the world's most comprehensive product family for vacuum generation, measurement and control for the rough and fine vacuum range in the laboratory.

**All with one goal:**
Enabling our customers to run reliable, safe and efficient processes. This is why we commit ourselves to continuous innovation, first-class performance, and outstanding quality.

Engineering excellence is central to our ability to deliver products and solutions renowned for their quality, durability, and reliability. Innovative technology, high quality materials and extensive testing deliver unmatched performance - engineered and manufactured in Germany.

Together with you, our experts will find the best solution for your application and provide you with first-class service along the way.

© VACUUBRAND GMBH + CO KG

BRAND (Shanghai) Trading Co., Ltd.
Shanghai, China

T +86 21 6422 2318
info@brand.com.cn
china.brand.com.cn

BRAND Scientific Equipment Pvt. Ltd.
Mumbai, India

T +91 22 42957790
customersupport@brand.co.in
www.brand.co.in

BRANDTECH® Scientific, Inc.
Essex, CT. United States of America

T +1 860 767 2562
info@brandtech.com
www.brandtech.com

BRANDGROUP®