VACUUBRAND®

化学杂交泵
RC 6



网站链接

产品说明

RC 6化学杂交泵是将一个双级旋片泵和一个双级化学隔膜泵结合在一起，达到最佳的耐腐蚀效果。隔膜泵用以维持油腔内的真空度，使溶剂蒸汽的分压保持在它们的露点之下，大大减少氧化性或腐蚀性气体的冷凝。

性能特点

- 减少内部腐蚀，即使抽取腐蚀性气体仍然如此
- 与单独的旋片泵相比，减少了90%以上的油消耗
- 最经济的解决方案：在实际操作中经常不需要再另配冷阱。针对大量蒸汽情况，可选用进气口配冷阱的PC3/RC 6真空系统
- 采用“镜筒”式设计，易于维护
- 采用“镜筒”式设计，易于维护

© VACUUBRAND GMBH + CO KG | 2026

订购信息

产品名称	额定电源电压|工作频率	电源插头类型	订货号
RC 6	230 V | 50-60 Hz	UK, IN	20798562

货品配置

泵体安装完毕，泵油注入后即可使用（附带0.5升泵油），附带说明书

配件

- **带小法兰的**PTFE**管（抗静电的）** KF DN 16 (20686031)
- **带小法兰的金属真空管** KF DN 16 (20673336)
- **化学真空系统的基础模块（不含泵）** PC 8 (20699949)
- RC (20640187)
- **高真空控制套装** VACUU·SELECT + VACUU·VIEW extended, KF DN 16 (20700100)
- **高真空控制套装** VACUU·SELECT + VSP 3000, KF DN 16 (20700101)
- **透明真空管** DN 8 mm (20686061)
- **带软管喷嘴接头的小法兰** KF DN 16 / DN 10 mm (20662806)
- **维护套件** RC 6 (20649990)
- **维护套件** RC 6 (20649990)

© VACUUBRAND GMBH + CO KG | 2026

技术指标

50 Hz 最大抽速 (m^3/h)	5.9 m^3/h
60 Hz 最大抽速 (cfm)	4.1 cfm
极限真空	2 x 10^{-3} mbar / 1.5 x 10^{-3} torr
极限真空，使用气镇	1 x 10^{-2} mbar / 0.75 x 10^{-2} torr
不开气镇的极限分压，单位	4 x 10^{-4} mbar / 3 x 10^{-4} torr
开气镇的水蒸气允许压力	>> 40 mbar / >> 30 torr
泵头数	2
泵级数	2 + 2
的允许环境温度范围（运行）	12 - 40 °C
的允许环境温度范围（存放）	-10 - 60 °C
最大出气口压力 (绝对压力)	1.1 bar
注油量 min./max.	0.34 / 0.50 l
进气口连接	KF DN 16 小法兰
出气口连接	软管喷嘴接头 DN 8-10 mm
额定电机功率	0.3 kW
额定转速 50/60 Hz	1500/1800 min^{-1}
防护等级	IP 40
尺寸（长x宽x高）	526 mm x 302 mm x 226 mm
重量	25 kg
噪音水平 50 Hz/1500 Upm/62% (VARIO)/1500 Upm (VARIO-SP)/12500 Upm (VACUU·PURE®)	50 dBA
NRTL 标准	否

© VACUUBRAND GMBH + CO KG | 2026

50 Hz下的抽速曲线

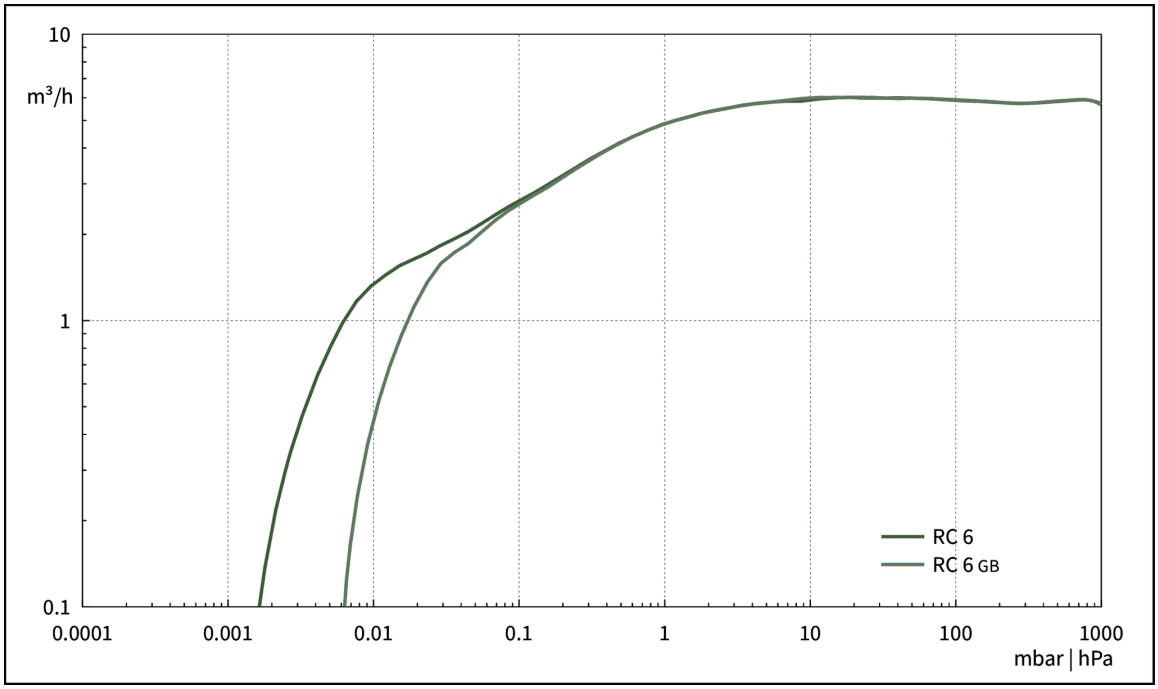

50 Hz下的抽气曲线 （10升容积）

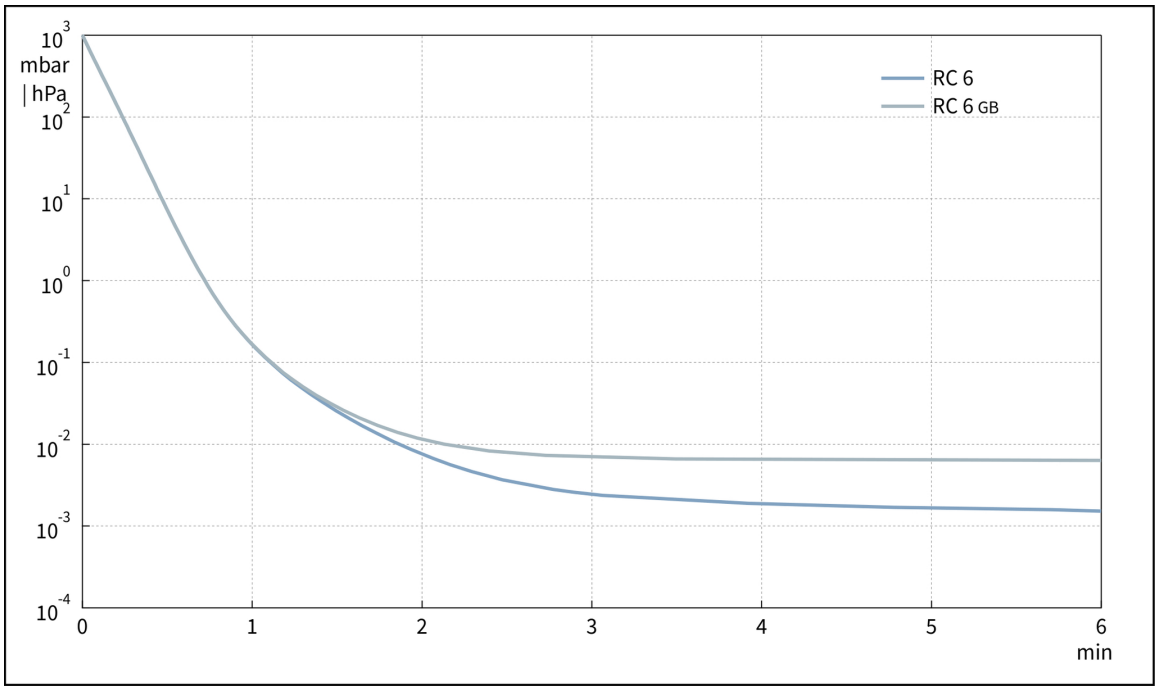

© VACUUBRAND GMBH + CO KG | 2026

60 Hz下的抽速曲线

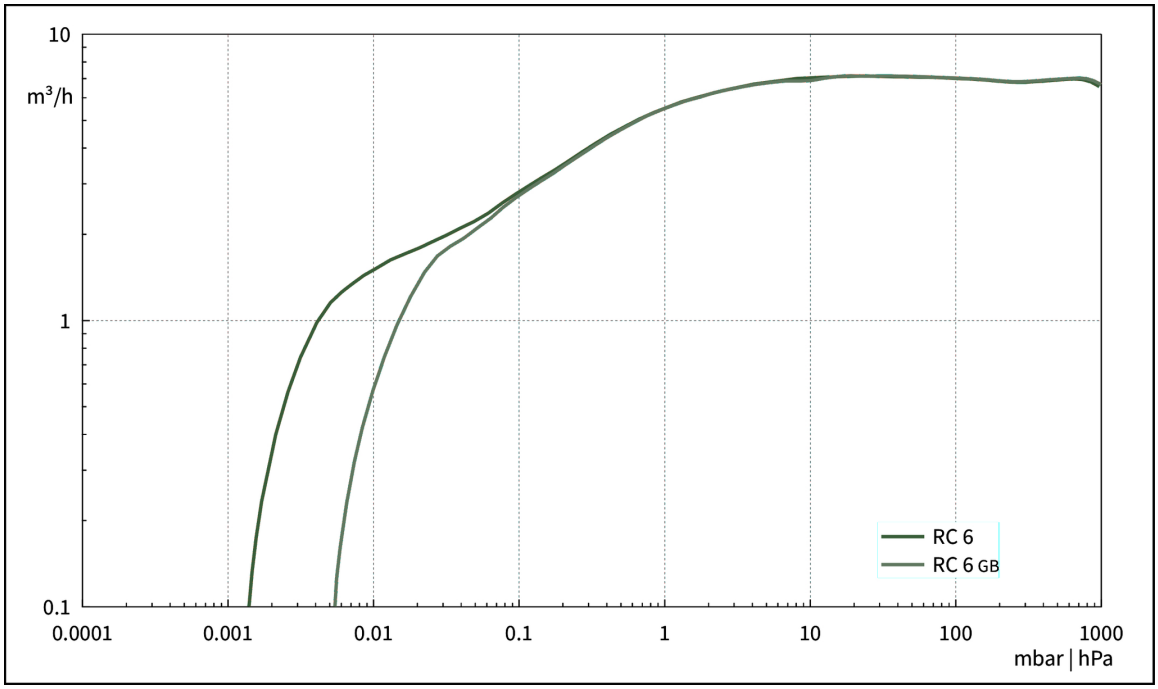

60 Hz下的抽气曲线 （10升容积）

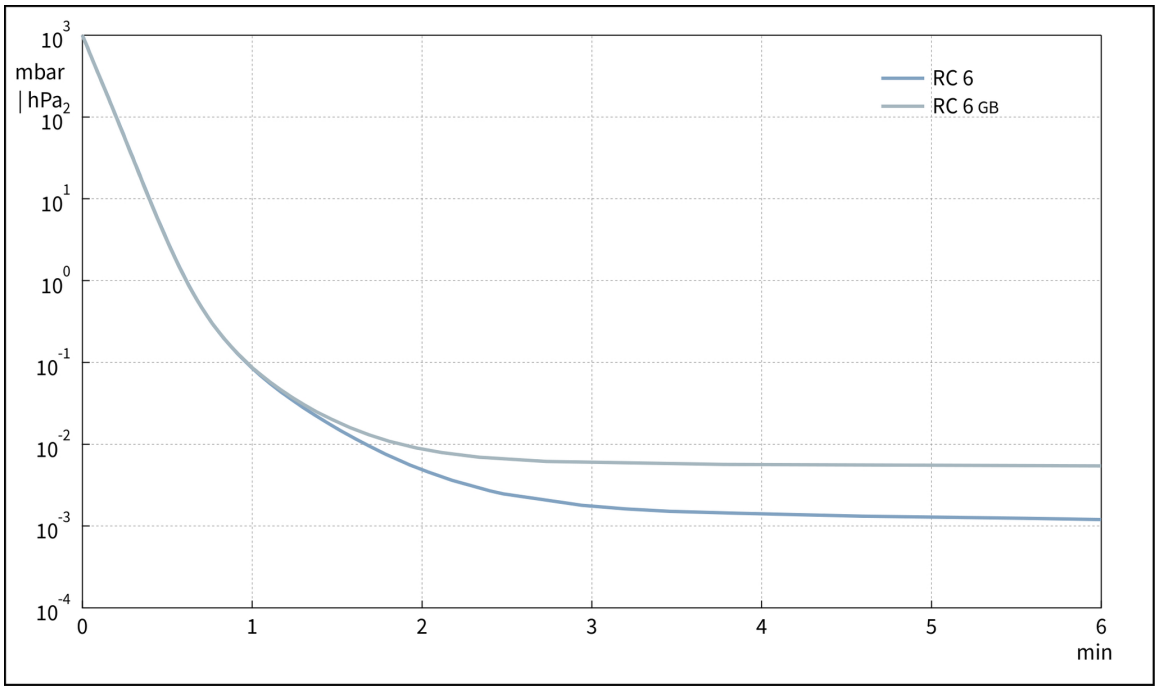

© VACUUBRAND GMBH + CO KG | 2026

尺寸规格表

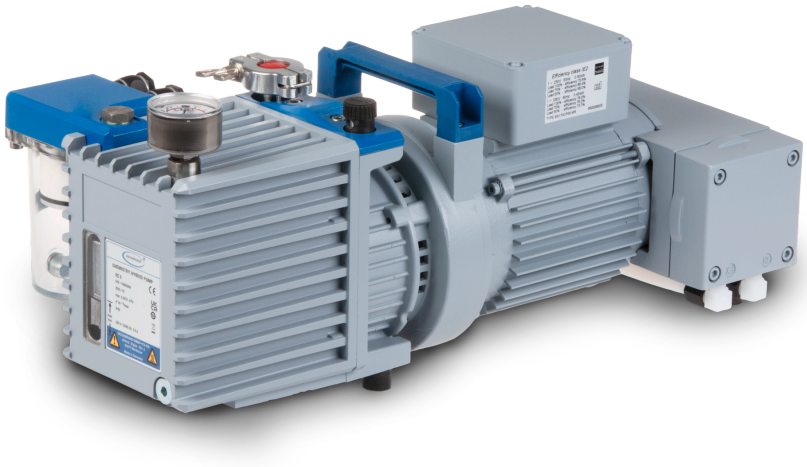

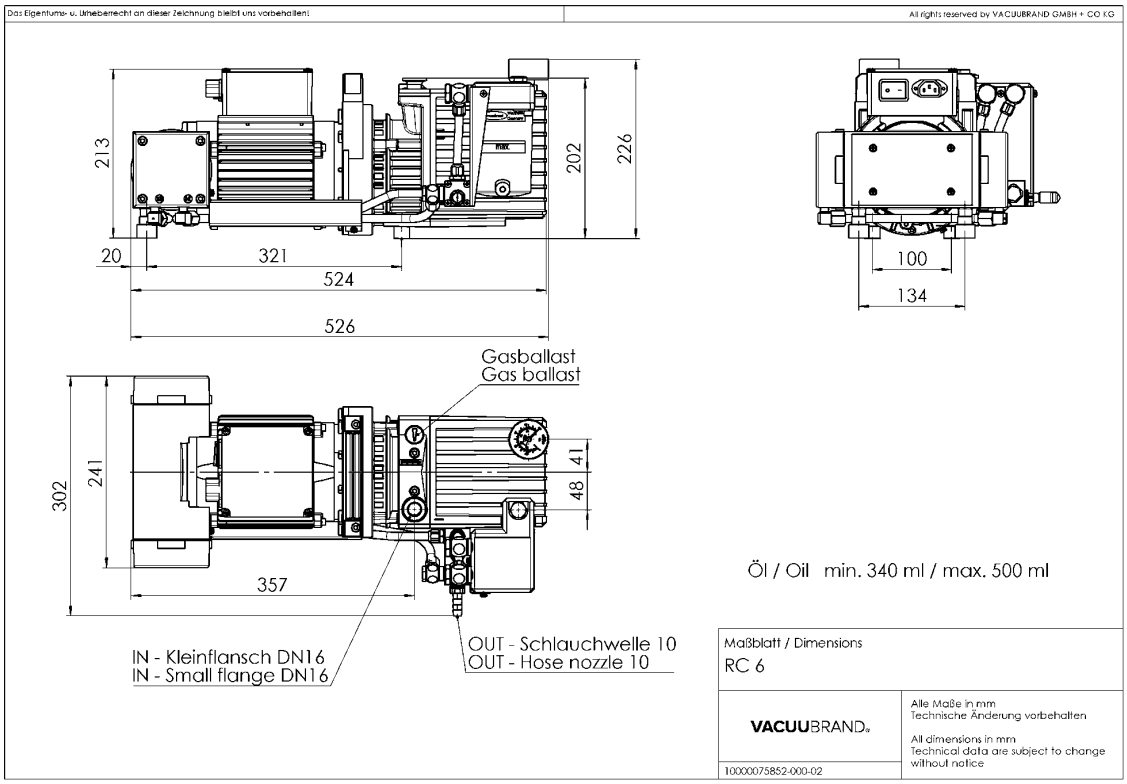

技术参数如有变化,恕不另行通知

© VACUUBRAND GMBH + CO KG | 2026

网站链接:

https://shop.vacuubrand.com/20798562

VACUUBRAND GMBH + CO KG
P.O. Box 1664
97877 Wertheim
T +49 9342 808 5550
F +49 9342 808 5555

info@vacuubrand.com
www.vacuubrand.com

VACUUBRAND

VACUUBRAND is part of the Brand group, a manufacturer of high-quality and innovative laboratory equipment and vacuum technology with a global team of approx. 1,000 employees.

With highly motivated and qualified employees, we manufacture the world's most comprehensive product family for vacuum generation, measurement and control for the rough and fine vacuum range in the laboratory.

All with one goal:
Enabling our customers to run reliable, safe and efficient processes. This is why we commit ourselves to continuous innovation, first-class performance, and outstanding quality.

Engineering excellence is central to our ability to deliver products and solutions renowned for their quality, durability, and reliability. Innovative technology, high quality materials and extensive testing deliver unmatched performance - engineered and manufactured in Germany.

Together with you, our experts will find the best solution for your application and provide you with first-class service along the way.

© VACUUBRAND GMBH + CO KG

BRAND (Shanghai) Trading Co., Ltd.
Shanghai, China

T +86 21 6422 2318
info@brand.com.cn
china.brand.com.cn

BRAND Scientific Equipment Pvt. Ltd.
Mumbai, India

T +91 22 42957790
customersupport@brand.co.in
www.brand.co.in

BRANDTECH® Scientific, Inc.
Essex, CT. United States of America

T +1 860 767 2562
info@brandtech.com
www.brandtech.com

BRANDGROUP®